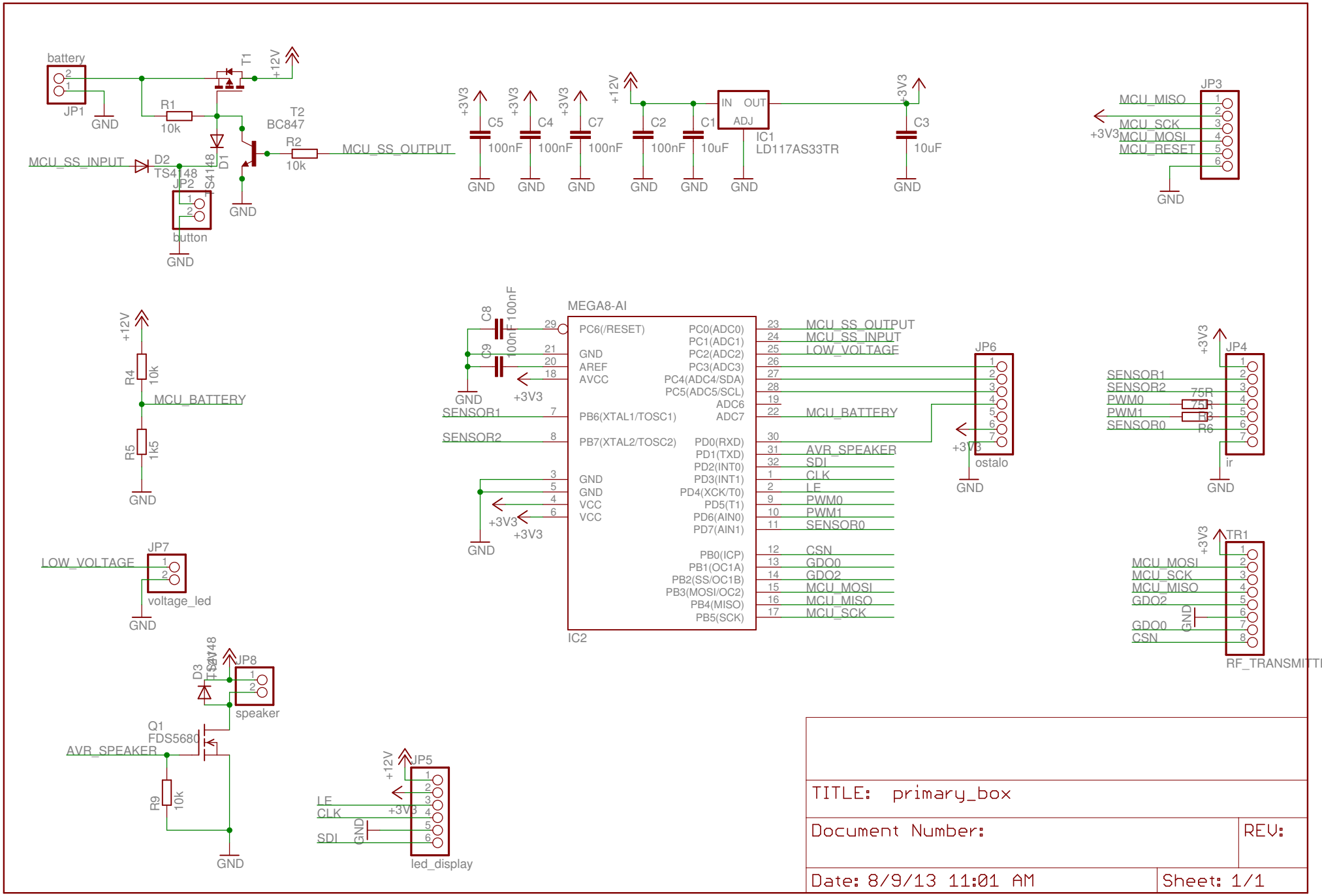
battery
JP1
GND
R1
10k
T1
+12V
T2
BC847
R2
10k
MCU_SS_OUTPUT
MCU_SS_INPUT
D2
TS4148
D1
TS4148
JP2
button
GND
+3V3
C5
100nF
C4
100nF
C7
100nF
+12V
C2
100nF
C1
10uF
IN OUT
ADJ
IC1
LD117AS33TR
+3V3
C3
10uF
JP3
MCU_MISO
MCU_SCK
MCU_MOSI
MCU_RESET
+3V3
R4
10k
MCU_BATTERY
R5
1k5
C8
100nF
C9
100nF
MEGA8-AI
PC6(/RESET)
GND
AREF
AVCC
PB6(XTAL1/TOSC1)
PB7(XTAL2/TOSC2)
GND
GND
VCC
VCC
SENSOR1
SENSOR2
PC0(ADC0)
PC1(ADC1)
PC2(ADC2)
PC3(ADC3)
PC4(ADC4/SDA)
PC5(ADC5/SCL)
ADC6
ADC7
PD0(RXD)
PD1(TXD)
PD2(INT0)
PD3(INT1)
PD4(XCK/T0)
PD5(T1)
PD6(AIN0)
PD7(AIN1)
PB0(ICP)
PB1(OC1A)
PB2(SS/OC1B)
PB3(MOSI/OC2)
PB4(MISO)
PB5(SCK)
IC2
MCU_SS_OUTPUT
MCU_SS_INPUT
LOW_VOLTAGE
MCU_BATTERY
AVR_SPEAKER
SDI
CLK
LE
PWM0
PWM1
SENSOR0
CSN
GDO0
GDO2
MCU_MOSI
MCU_MISO
MCU_SCK
JP6
ostalo
JP4
SENSOR1
SENSOR2
PWM0
PWM1
SENSOR0
75R
R3
R6
ir
JP7
LOW_VOLTAGE
voltage_led
JP8
speaker
D3
TS4148
Q1
FDS5680
AVR_SPEAKER
R9
10k
JP5
LE
CLK
SDI
led_display
TR1
MCU_MOSI
MCU_SCK
MCU_MISO
GDO2
GDO0
CSN
RF_TRANSMITTER
TITLE: primary_box
Document Number:
REV:
Date: 8/9/13 11:01 AM
Sheet: 1/1